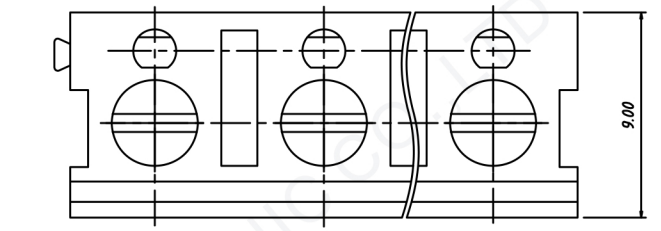

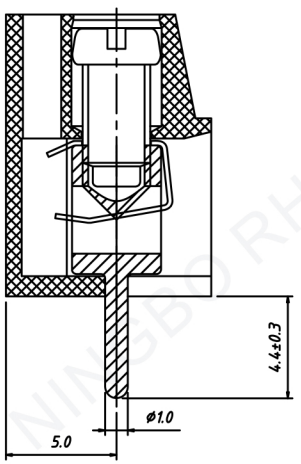

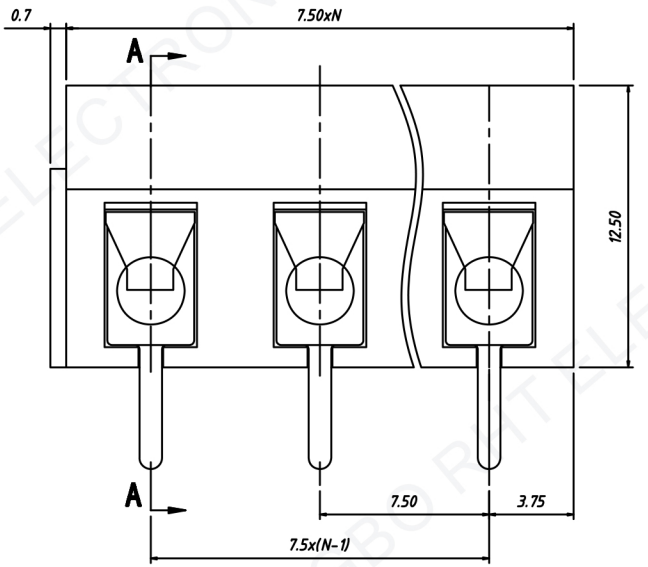

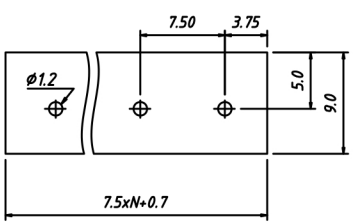

PCB LAYOUT

Material

Screw: M3, Steel,Zn plated
Shrapnel: Phosphor bronze, Nickel plated
Pin header: Brass, Tin plated
Housing: PA66, UL94V-0

Electrical

Rated voltage: 250V
Rated current: 16A
Wirerange: 22~14AWG 2.5mm²
Contact Resistance: 20 m Ω
Insulation resistance: 500MΩ/DC500V
Withstand voltage: AC2000V / 1 min

Mechanical

Temp. Range: -40 °C ~ + 105 °C
Soldering: 250 °C 5Sec. Max.
Torque: 0.5 N.m (4.43Lb. in)
Strip length: 4.5~5 mm

Order Information

RE - C -300 -7.50-XXP-2 S XX

- RoHS
- Terminal Block
- Pitch
- No.: of Pole
- Color: 2- Blue
- Screw: S- Slot Screw
- Product Code:00~99

RHTECP® NINGBO RHT ELECTRONIC CO.,LTD	UNITS:mm	SHEET SIZE:A4	SCALE: ---		First angle projection
	> 0 ~ 3	> 3 ~ 18	> 18 ~ 50	> 50 ~ 120	TERMINAL BLOCK
	± 0.12	± 0.15	± 0.3	± 0.5	

NINGBO RHT ELECTRONIC CO.,LTD