www.rhtecp.com

## Side level sensor

RE-SE-MR1078-SL Stainless side level sensor

**Material:**

Float ball:SUS304
Float body:SUS304
E-ring:SUS304
Wire:UL 1015 22# black
Filling:epoxy glue
Reed switch:229

**Electrical Specification:**

Contact rating:50W
Max switching current:DC350/AC300
Breakdown voltage:600 min
Max switching voltage:DC0.7/AC0.5
Max carry current:2.5A
Contact resistance:100 max
Insulation resistance:$10^{10}$ min
Get an electric shock life:$10^{7}$
Applicable temperature:-15ºC~+125ºC

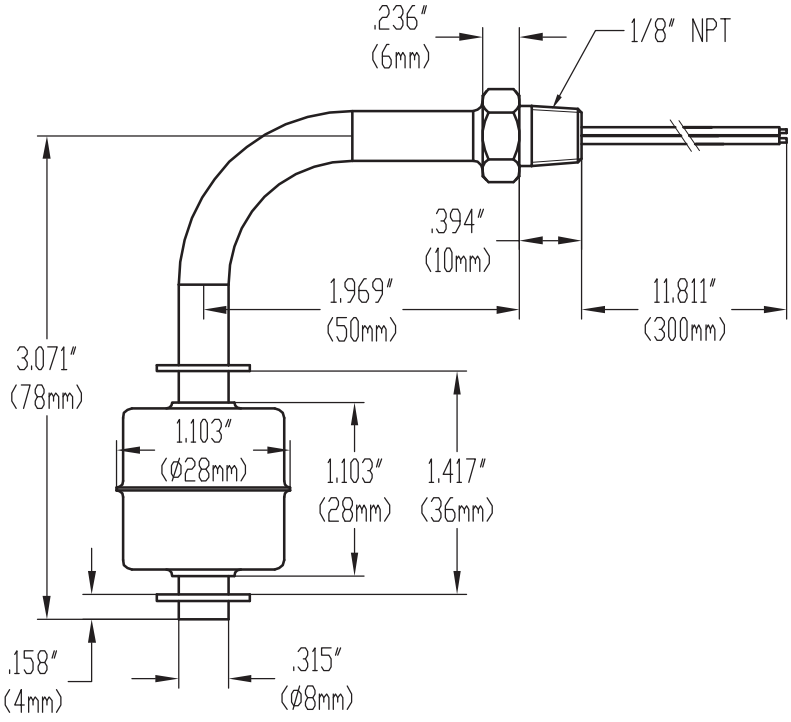


**Movement explanation**

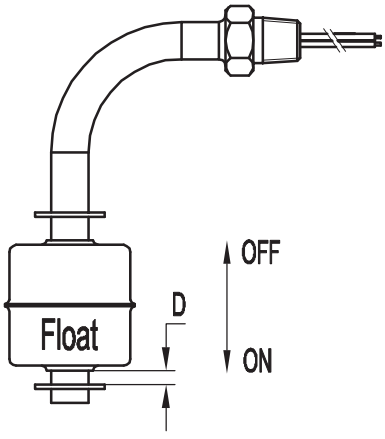


**Movement explanation:**
When the float drops to the D position in the position between D=3±1mm,the reed switches will be closed

## ORDER INFORMATION

Product NO.: RE-SE-MR1078-SL

Pos. NO. — Serial number